WT CONSTRUCTION

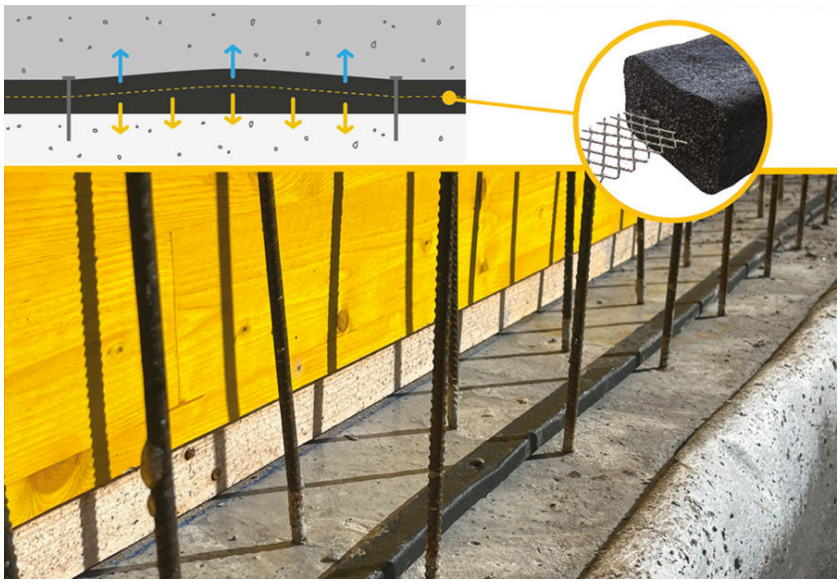

WATERSTOP-MASTICI IDROESPANDENTI

EAD 320008-01-0605
ETA-24/0387

PRODUCT DESCRIPTION

WT CONSTRUCTION is a HYDRO-EXPANSIVE profile based on AMPHIBIA copolymer in EPDM rubber, reinforced in the center with a CO-EXTRUDED steel MESH that stabilizes and directs the volumetric expansion.

PRODUCT APPLICATION

• To seal vertical and horizontal concrete construction joints

ADVANTAGES

• Versatile, adapts to various types of conditions, wet, rough, uneven, sloping, vaulted or ceiling supports, from -15°C to +50°C
• Quick and easy application by simply nailing
• Strong mechanical anchoring, does not shift during casting, impact-resistant
• Excellent adhesion to the substrate even during casting, adhesion increases as expansion increases in contact with water
• Maintains alignment during expansion
• Perfect sealing and high resistance to hydraulic load
• Resistant to rain, the profile maintains density
• Features excellent dimensional stability in the event of volume increases due to premature contact with water
• Contains microfibres, retains firmness and shape

PREPARATION AND APPLICATION

Even out the fresh concrete along the profile application site with a straight edge or trowel.

Once the concrete has hardened, use BI MASTIC or AKTI-VO 201 hydro-expanding mastic (see relevant technical data sheets) in those sections where the application site still appears overly rough to even out the surface. Do not even out the application site with mortar.

Lay WT CONSTRUCTION on the application surface, previously cleared of dust and loose material, with the protective paper facing upwards, then remove it and fasten the profile with the nails provided every 15 cm.

In case of “T” or “head-on-head” joining, nailing must be performed close up (see FIG. 2).

Any gaps on the joints must be filled with AKTI-VO 201 or BI MASTIC (see FIG. 3).

Alternatively, the joints may be performed by means of heat-welding of the heads (hairdryer).

How it works

WT CONSTRUCTION, in contact with water, can increase the initial volume by up to 5 times while maintaining the density and adapting the shape to the small gaps that are often present in concrete castings.

WT CONSTRUCTION ensures the sealing of construction joints, even when subjected to considerable hydraulic pressure.

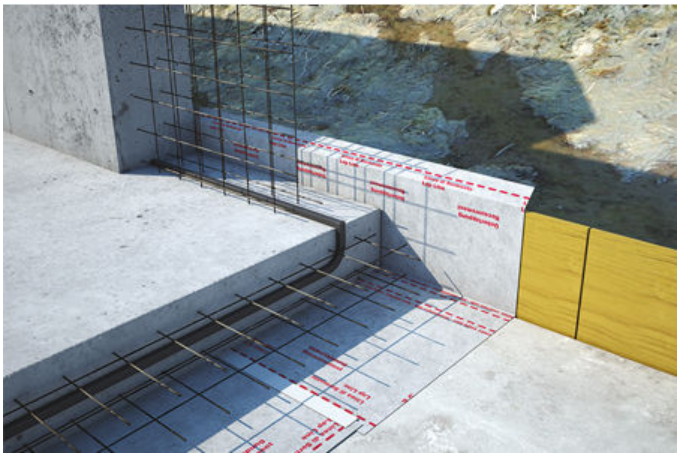

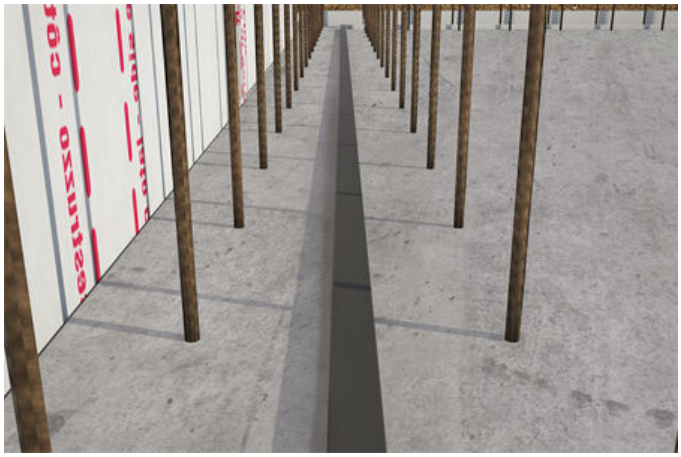

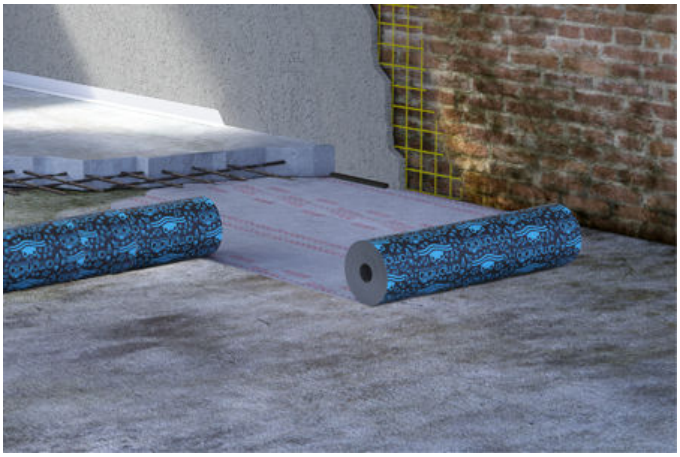

References available at www.volteco.com

PACKAGING AND STORAGE

WT CONSTRUCTION is available in the following formats:

WT C 20.10 is packaged in a cardboard box containing 30 m complete with nails for fastening.

WT C 25.15 is packaged in a cardboard box containing 21 m complete with nails for fastening.

The products must be stored in a dry place protected from sun and humidity.

WARNINGS - IMPORTANT NOTES

WT CONSTRUCTION cannot be used as a dilatation joint.

WT CONSTRUCTION must be used on walls that are thick enough to guarantee a minimum cover of 8 cm on the sides.

WT CONSTRUCTION must be placed on the application surfaces, ensuring no material remains between the product and the surface itself.

Spacers or tie rods of the vertical casting must be placed at a minimum distance from the horizontal plane, of no less than 5÷10 cm (see FIG. 1).

PLEASE NOTE: Contact the Volteco Laboratory for any preventive tests when applying the product in the presence of water with a high salt concentration.

PHYSICAL AND TECHNICAL SPECIFICATIONS

Specification	Values
Specific weight	1.02 g/cm^3
Application temperature	-15°C +50°C
Colour	black

Feature	Test method	Result/Classification
Reaction to fire	EN ISO 11925-2 EN 13501-1	Class E
Dimensions WT C 20.10 WT C 25.15	EAD 2.2.2	 20x10 mm (± 10%) 25x15 mm (± 10%)
Impermeability under end-use conditions	EAD 2.2.3	20 m water column / waterproof up to 5 bar
Swelling pressure WT C 20.10 WT C 25.15	EAD 2.2.6	 1,2 N/mm^2 1,4 N/mm^2
Expansion in saline water (3%)		> 100%
Hydraulic seal on 5 mm crack with expansion of 100%		No passage up to 150 kPa

Feature	Test method	Test liquid	Time until constant mass is achieved	Change in mass
Expansion in contact with different liquids	EAD 2.2.4	Deionised water Alkaline solution Acid solution	25 d 14 d 24 d	1004 % 455 % 474 %
First expansion cycle	EAD 2.2.5	Deionised water	16 d	1794 %

Feature	Test method	Test liquid	Time until constant mass is achieved	Change in mass
Reversibility of the expansion process		Alkaline solution Acid solution	16 d 23 d	479 % 503 %
Second expansion cycle Reversibility of the expansion process	EAD 2.2.5	Deionised water Alkaline solution Acid solution	14 d 14 d 21 d	1855 % 419 % 436 %

- the expansion process is reversible

- the expansion process begins immediately

WATCH VIDEOS AND INSIGHTS

Safety Data Sheets | Declaration of performance | Specifications | Technical diagrams and DOPs | EPD Declaration | YouTube Video

SAFETY

Refer to the related Safety Data Sheet.

COPYRIGHT

© Copyright Volteco S.p.A. - All rights reserved.
Information, images and text found in this document are exclusive property of Volteco S.p.A.
They may change anytime without prior notice.
Updated versions of this and other documentation (specification, brochure, other) are on www.volteco.com.
In case of translation text may contain technical and linguistic inaccuracies.

LEGAL NOTES

Note for buyer/installer:
This document prepared by Volteco S.p.A. is provided as an aid and guideline for the buyer/installer.
This does not take into consideration the details of each single operational context, for which Volteco S.p.A. will not be held liable.
This does not change and does not extend the obligations of Volteco S.p.A.
It may vary and the installer is therefore required to update his/her information prior to each application by referring to

www.volteco.com.
The above clarifications extend to the pre-post-sales technical/commercial information of the commercial network.

ANNEXES

1

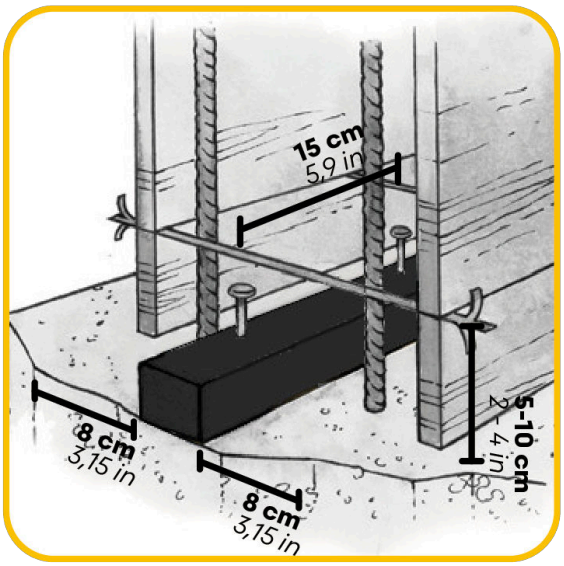

2

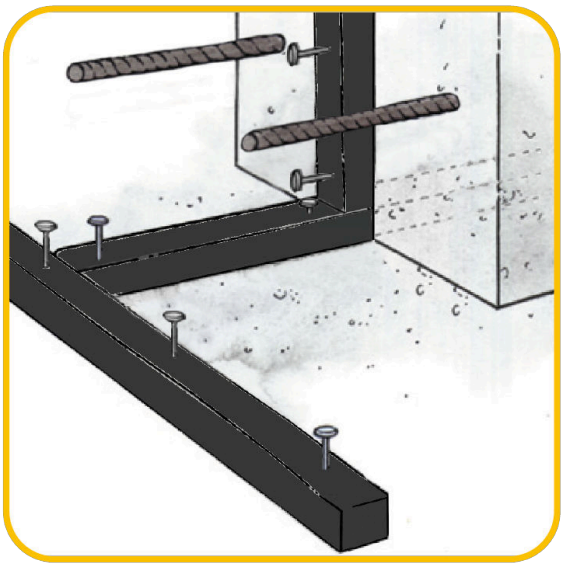

3